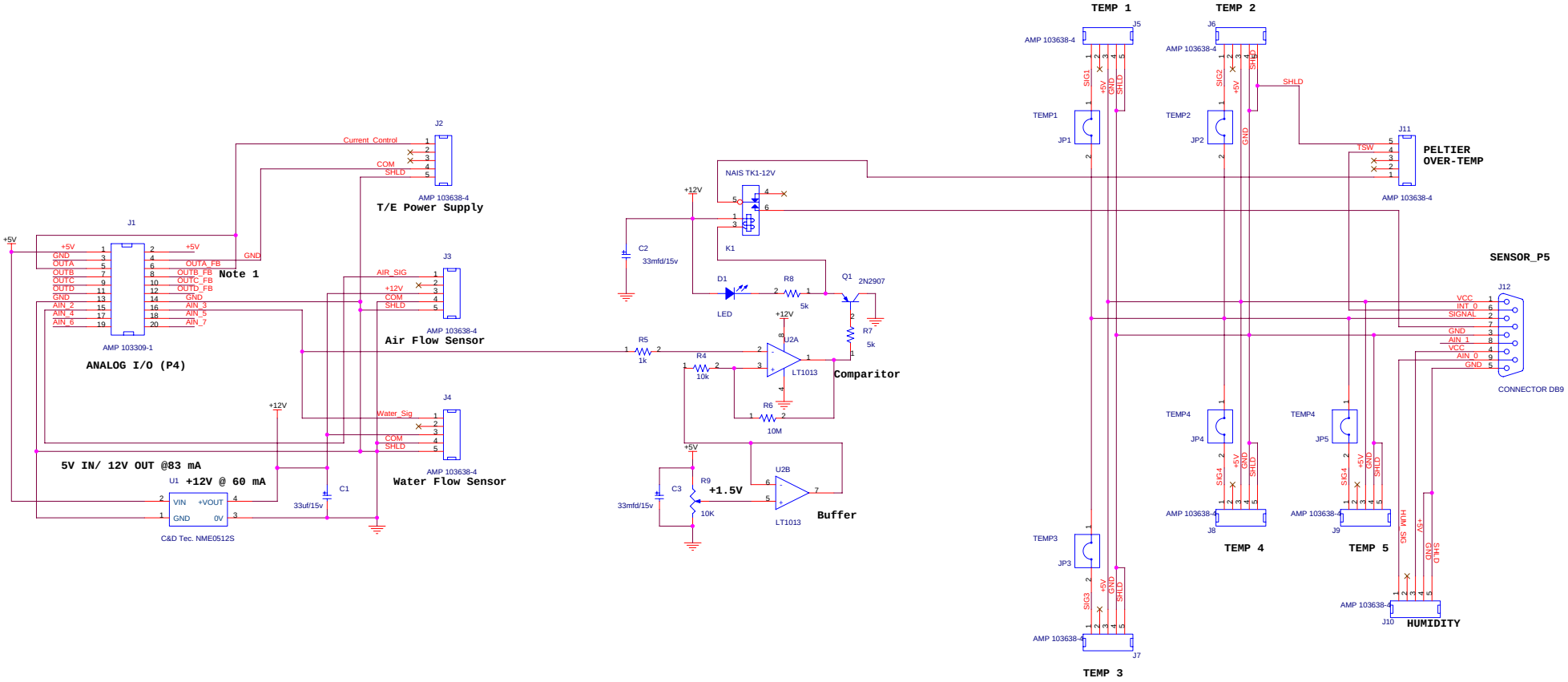

Title <Title>		
Size C	Document Number <Doc>	Rev <RevCode>
Date: Friday, February 04, 2005	Sheet 1 of 1	